L85SA-G-xxx

Green LED helideck perimeter light

A LED helideck perimeter lights to meet the demanding requirements of offshore environmental conditions. The design is based on low power long life LED technology and use of stainless steel. These fittings meet the regulatory requirements for ICAO, CAP437 and IMO.

KEY FEATURES

- Reliable recessed mounted helideck perimeter light
- Low cost of ownership
- Low power consumption
- Serviceable unit, parts are interchangeable
- Compact design, meeting the maximum 50 mm height restrictions of IMO
- Intensity main beam 30cd green (CAP437)
- Impact resistant dome and stainless steel 316 body
- Spacious, cable connection compartment
- Photometric test of independent institution

STANDARDS/CERTIFICATION

- Certified to CAA-UK CAP 437; Offshore helicopter landing areas – Guidance on standards, 7th edition, chapter 4, paragraph 3.1
- Certified to IMO standard MODU code; 2009 (Edition 2010), chapter 13.5.21
- Certified to ICAO Annex 14, Volume II; International standards and recommended practices: Aerodromes, 3rd edition, July 2009, chapter 5.3.8

PERFORMANCE CHARACTERISTICS

- Steady burning; green
- Intensity: 30cd (60cd maximum)
- Horizontal beam coverage: 360°
- Vertical beam profile: as per CAP437 table
- Colour chromaticity within the boundaries as specified by ICAO
- Light source: LED

ELECTRICAL CHARACTERISTICS

- Operating voltage: see table
- Power consumption: see table
- Connection details: M4; two M25x1.5 cable entries
- Earth connection: internal M4 and external M6

PHYSICAL CHARACTERISTICS

- Dimensions (□ x H): see drawing
- Weight: see table
- Design degree of protection: IP66
- Operating temperature range: -40°C to +55°C

All values mentioned in this document are typical values.
Document can be subject to modifications, without prior notice.
Datasheet last modified on April 13, 2021.

info@orga.nl
T +31 (0)10 208 55 55
F +31 (0)10 437 8445

P.O. Box 3046
3101 EA SCHIEDAM
The Netherlands

Orga BV
Strickledeweg 13
3125AT Schiedam
The Netherlands

L85SA-G-xxx

Green LED helideck perimeter light

	Operating voltage range	Power consumption	Weight
L85SA-G-AC	100-254 Vac; 50-60 Hz	4.5 W (6 VA)	3.6 kg
L85SA-G-DC	20-30 Vdc	4 W	3.6 kg
L85SA-G-AC-RE	100-254 Vac; 50-60 Hz	4.5 W (6 VA)	9.1 kg
L85SA-G-DC-RE	20-30 Vdc	4 W	9.1 kg

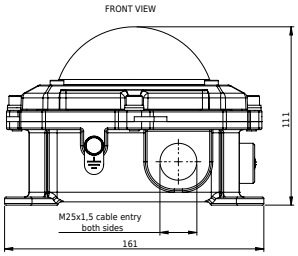

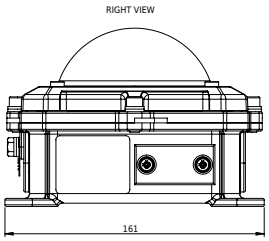

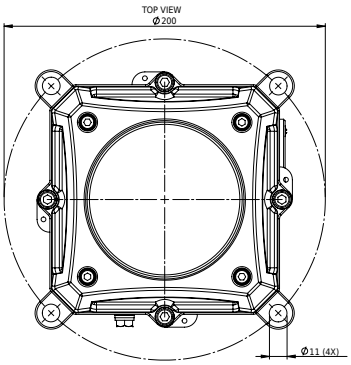

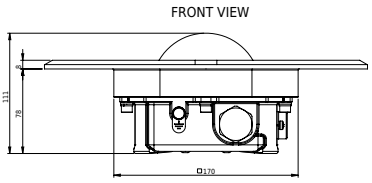

All values mentioned in this document are typical values.
Document can be subject to modifications, without prior notice.
Datasheet last modified on April 13, 2021.

info@orga.nl
T +31 (0)10 208 55 55
F +31 (0)10 437 8445

P.O. Box 3046
3101 EA SCHIEDAM
The Netherlands

Orga BV
Strickledeweg 13
3125AT Schiedam
The Netherlands